Research & Design of Nuclear Engineering, **2**, 2025007 (2026)
© J. Xing et al. 2026. Published by EDP Sciences.
https://doi.org/10.1051/rdne/2025007

Available online at:
https://rdne.edpsciences.org/

RESEARCH ARTICLE

OPEN ACCESS

Nuclear energy comprehensive utilization technology and practice in China under the "carbon peak and carbon neutrality" goals

Ji Xing, Li Fan, Ping Wang*, Yibo Luo, and Zhipeng Guo

China Nuclear Power Engineering Corporation, Xisanhuanbeilu No. 117, Beijing 100084, PR China

Received: 19 February 2025 / Accepted: 18 July 2025

Abstract. In the context of global climate change and China's efforts to achieve the "carbon peak and carbon neutrality" goals, nuclear energy, as a clean, low-carbon, and efficient energy source, plays a significant role in the green and low-carbon transformation of the energy sector. This paper analyzes the development background of nuclear energy comprehensive utilization, explores the latest progress in technologies such as nuclear steam supply, heating, hydrogen production, seawater desalination, and waste heat utilization, and summarizes the application practices of these technologies. The study indicates that the comprehensive utilization of nuclear energy can significantly improve energy efficiency and reduce carbon emissions, providing green energy solutions for industries, transportation, and heating. However, the comprehensive utilization of nuclear energy still faces challenges such as technological potential, incomplete regulations and standards, and economic. In the future, it is necessary to intensify technological innovation, improve relevant policy support, and promote the widespread application of nuclear energy comprehensive utilization to help achieve the "carbon peak and carbon neutrality" goals and sustainable development.

Keywords: Nuclear energy comprehensive utilization / Carbon peak and carbon neutrality / Steam supply / District heating / Hydrogen production / Desalination / Waste heat utilization.

1 Background of the development of nuclear energy comprehensive utilization under new circumstances

In the context of global efforts to combat climate change and China's commitment to achieving the goals of "carbon peak by 2030 and carbon neutrality by 2060," there is a new imperative to accelerate the green and low-carbon transformation of energy. Production methods are rapidly shifting towards low-carbon and intelligent models, and the energy system and development patterns are entering a new phase dominated by non-fossil energy sources. Nuclear energy, as a clean, low-carbon, safe, and efficient source of energy [1], plays a significant role in ensuring national energy supply and adjusting the energy structure. It is crucial in addressing climate warming, extreme weather events, sudden pandemics, and improving the global environment, making it an important choice for achieving the targets of carbon peak and carbon neutrality [2, 3].

Nuclear power in our country has been operating safely and steadily, laying a solid foundation for comprehensive utilization. Since 2021, there have been no operational events at or above Level 1 on the International Nuclear and Radiological Event Scale [4] (INES) nationwide. In 2023, the proportion of nuclear power units achieving a full score on the WANO Integrated Index reached 61.1%, with an average value higher than that of major nuclear power countries such as the United States, Russia, France, and South Korea, and better than the global average for nuclear units [5, 6].

The orderly development of nuclear energy has provided continuous impetus for technological innovation. Pressurized water reactors (PWR) have entered a stage of large-scale development [7], high-temperature gas-cooled reactor (HTGR) demonstration projects have achieved full-power operation, and the construction of small modular reactors (SMR) is progressing smoothly [8], with various advanced reactor technologies under active research and development. As of December 2023, there were 55 commercial nuclear power units in operation nationwide (excluding China Taiwan), with a total installed capacity of 57.03 GW, and 26 nuclear units under construction, with a total installed capacity of 30.3 GW. In 2023, the cumulative electricity generation of China's nuclear power units reached 433.371 billion kWh, accounting for 4.86% of the total electricity generation. The average utilization hours of nuclear power equipment were 7661.08 h, and the

* e-mail: wangpinga@cnpe.cc

This is an Open Access article distributed under the terms of the Creative Commons Attribution License (https://creativecommons.org/licenses/by/4.0), which permits unrestricted use, distribution, and reproduction in any medium, provided the original work is properly cited.

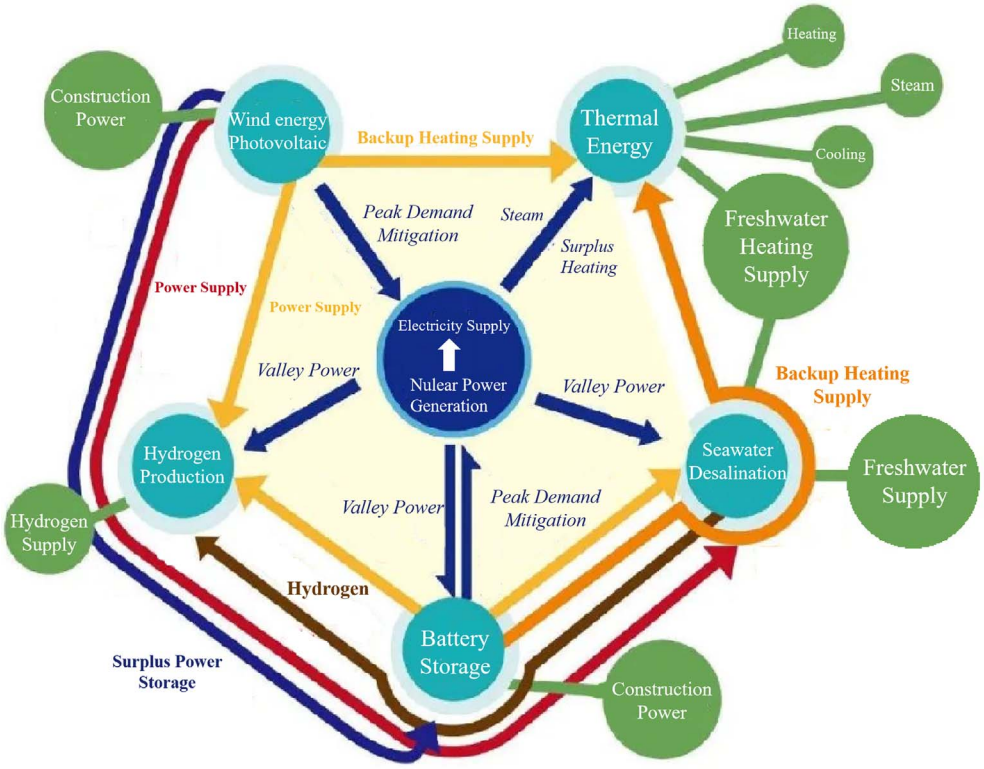

Fig. 1. Diverse applications of nuclear energy utilization.

average capacity factor of the units was 91.25%. Compared to coal combustion, this is equivalent to reducing the burning of standard coal by 123 million tons [9], reducing carbon dioxide emissions by 323 million tons, reducing sulfur dioxide emissions by 1.0489 million tons, and reducing nitrogen oxide emissions by 913,000 tons [10].

The proposal of the "carbon peak and carbon neutrality" goals has promised a prospect for the innovative application of nuclear energy. The application fields of nuclear energy have expanded from pure power generation to a wider range of areas (see Fig. 1). According to IAEA statistics, in 2023, 45 units in 10 countries worldwide provided 20.46 billion kWh of process heat for comprehensive utilization. Of this, 88% was used for district heating, 10% for industrial heat (steam), and the remaining 2% for desalination. The important role of nuclear cogeneration in addressing climate change has begun to emerge [11].

To achieve the "carbon peak and carbon neutrality" goals, the country has successively introduced a series of policies [12–16] to promote the expansion of nuclear energy applications into industrial steam supply, regional heating/cooling, hydrogen production, desalination, and waste heat utilization. The State Council's "Opinions on Fully, Accurately, and Comprehensively Implementing the New Development Philosophy and Doing a Good Job in Carbon Peaking and Carbon Neutrality" clearly points out the need to "actively and steadily promote nuclear power waste heat for heating." The National Development and Reform Commission's "14th Five-Year Plan for Modern Energy System" [17] proposes "promoting the comprehensive utilization of nuclear energy in clean heating, industrial heat supply, and desalination."

Under the positive guidance of policies, the nuclear energy industry continues to innovate and conduct a series of in-depth research and practical activities, gradually promoting the comprehensive utilization of nuclear energy from "0–1" scientific breakthroughs to "1–100" major engineering applications.

2 Nuclear energy comprehensive utilization development status

Nuclear energy comprehensive utilization can effectively enhance energy efficiency in various forms, increasing the energy utilization rate from about 37% for single electricity generation to 50% or even higher [18]. A range of technologies, including nuclear steam supply, heating, hydrogen production, desalination, and waste heat utilization, are all under continuous development.

2.1 Nuclear steam supply

2.1.1 Nuclear energy for steam supply: a solution for decarbonizing industrial parks

Steam is another significant form of energy consumption in production, second only to electricity, with nearly 90% of industrial heat coming from fossil fuels. Nuclear energy for steam supply is an important pathway for decarbonizing

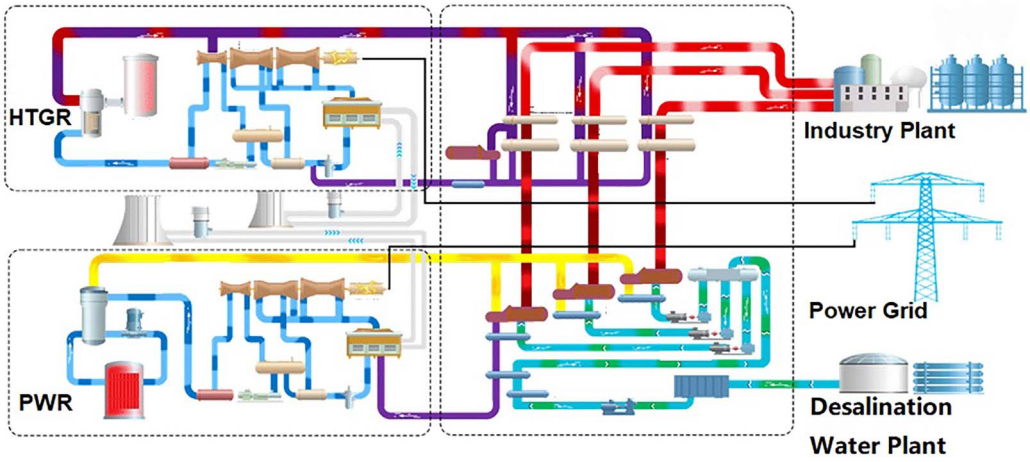

Fig. 2. Schematic diagram of steam supply process coupling PWR and HTGR.

high-energy-consuming industries [19]. China's first industrial nuclear steam supply project, "Heqi No. 1," was completed and put into operation in June 2024. "Heqi No. 1" uses the secondary circuit steam from the 3rd and 4th units of the Tianwan Nuclear Power Plant, which drives the turbine system to generate electricity, as the heat source. The nuclear power plant features a multi-layer isolation design between the primary circuit, secondary circuit, and steam circuit, allowing for the production of industrial steam in a physically isolated environment. This steam is then transported to the petrochemical industrial base through a multi-stage heat exchange process and an industrial steam network. After its completion, the project provides 4.8 million tons of zero-carbon clean steam annually, equivalent to reducing the combustion of 400,000 tons of standard coal per year. This is akin to adding 2,900 hectares of forested area and saving over 700,000 tons of carbon emission quotas for the local petrochemical base each year, resulting in an equivalent reduction of 1.07 million tons of carbon dioxide emissions [20–22].

The Jiangsu Xuwei Nuclear Energy Steam Supply Project, currently under development, utilizes a combination of four "Hualong One" units and two HTGRs for steam supply (see Fig. 2), with construction planned in two phases. This configuration leverages the advantages of the Hualong One PWR's large steam heat capacity and superior economic performance, while also utilizing the high steam parameters of the HTGR. In this project, the Hualong One produces saturated industrial steam, which is then superheated by the high-parameter steam from the HTGR. Through the cascading use of steam, the project can provide various steam qualities, including medium-temperature and medium-pressure, and low-temperature and low-pressure steam.

Furthermore, preliminary work on diversified nuclear steam supply based on various reactor types and targeting different users is being carried out in an orderly manner.

Some nuclear steam supply projects were conducted abroad in earlier years [23]. In 1956, the Calder Hall nuclear power plant in the UK supplied 196 MWt/h of industrial steam to the nearby Windscale fuel production project, which was shut down in 2003. In Germany, the Stade PWR provided 30 MWt/h of industrial steam to a test refinery located 1.5 km away in 1983, and it was also shut down in 2003. The Gosgen Nuclear Power Plant in Switzerland has been extracting process steam to serve a cardboard factory and other heat users located 2 km away since 1979, with a heating power of 25 MWt/h, and it is still in operation to date. In Canada, the CANDU reactor supplied steam for food processing and industrial ethanol production, which was shut down in 1998. In Norway, the Halden Reactor used to provide steam to nearby factories. The RAPS-II PWR in Kota, India, supplies steam for heavy water production nearby. Data released by the IAEA [11] shows that, as of December 2023, there are 29 operational nuclear power units worldwide that adopt cogeneration, providing industrial steam while generating electricity, mainly concentrated in Russia, as shown in Table 1.

Table 1. Nuclear power plants used for industrial steam supply in operation (as of December 2024).

Country	Reactor name	Reactor type
1. Norway	HALDEN	BWR
2. Switzerland	GOESGEN	PWR
3. CHINA	TIANWAN	PWR

In recent years, some nuclear energy countries have re-emphasized the importance of nuclear steam supply and are actively exploring top-level work or related projects for industrial steam supply using nuclear energy. Industrial producers in countries like the United States are planning to collaborate with Nuscale, based on modular SMR technology, for nuclear industrial steam supply projects. In November 2023, Nuscale and ORNL Oak Ridge National Laboratory jointly conducted a technical-economic evaluation of an economically efficient steam heating system design; they also carried out multiple decarbonization

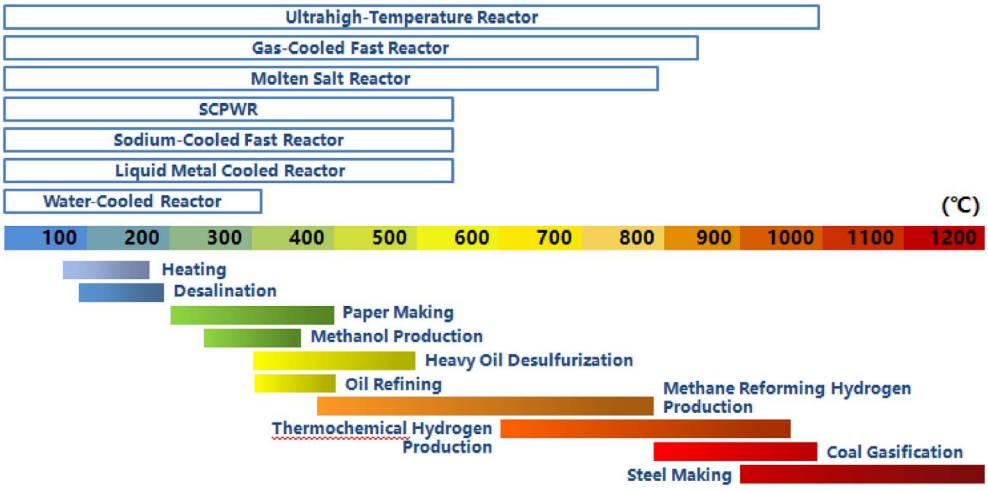

Fig. 3. Different reactors providing various steam supplies.

research reports for high-energy-consuming industries, including nuclear energy. In December 2023, the European Council passed the inclusion of nuclear energy in the Net Zero Industry Act (NZIA), laying the framework foundation for nuclear energy to serve as a strategic net-zero technology in the future and play a role in carbon reduction.

2.1.2 Nuclear energy for steam supply technology

The steam required for industrial production typically has high temperatures and pressures. Depending on the processing purposes across different industries, industrial steam temperatures usually range from 100 °C to 1,000 °C, and pressures cover from less than 1 megapascal to several tens of megapascals. Typical high-energy-consuming industries include petrochemicals, building materials, papermaking, and printing and dyeing. Different reactor types can provide various solutions to meet different steam demands (see Fig. 3).

Nuclear steam supply is a new approach that utilizes the thermal energy provided by nuclear power plants to meet the steam demands of industrial sector users, reduce overall energy consumption, and eliminate environmental pollution. Technically, nuclear steam supply primarily involves extracting steam from the secondary loop of nuclear power units as a heat source, passing it through multiple heat exchangers, and finally delivering the heat to the user end via an industrial steam network.

Depending on the steam parameter requirements, nuclear steam supply can be achieved through direct steam supply from a single reactor type or through coupled steam supply. In terms of direct steam supply from a single reactor type, large PWRs have significant advantages in steam supply capacity, with good technical maturity and economic viability; HTGR can independently provide higher steam parameters; SMR are more flexible in deployment, as shown in Table 2.

Extraction and steam conversion technology. According to the relevant requirements of the "Nuclear Power Plant Design Safety Regulations" (HAF102-2016), "The design of nuclear power plants connected to heat utilization devices (such as regional centralized heating) and/or desalination devices must prevent the migration of radioactive nuclides from the nuclear power plant to desalination devices or regional centralized heating devices under operating and accident conditions." Therefore, a steam conversion system is added when supplying steam to industrial users. In the steam conversion system, high-parameter steam provided by the reactor's secondary loop is used as a heat source to produce industrial steam with relatively lower parameters. The steam extracted from the reactor's secondary loop is gradually heated in the steam conversion equipment, releasing heat and becoming condensate, which then returns to the secondary loop condensate system via pipelines. Desalted water from the desalted water system is transformed into industrial steam that meets the requirements of heat users after being preheated, deoxygenated, heated, evaporated (steam generator), and superheated in the steam conversion equipment. The basic principle of nuclear steam supply is shown in Figure 4.

The steam supply process system is primarily composed of two parts: the reactor heat source steam supply system and the industrial steam production system. Reactor Heat Source Steam Supply System: A portion of the main steam is extracted from the conventional island's main steam system and directed through the plant's main steam pipeline to the energy station's steam conversion equipment. Within the steam conversion equipment, the main steam releases heat and turns into condensate, which then returns to the secondary loop's conventional island condensate system via pipelines. Industrial Steam Production System: Desalted water from the desalted water system is heated by the first feed pump through the first heater and sent into the deoxygener for deoxygenation. It is then pressurized by the second feed pump through the second feed water heater and sent into the evaporator to absorb the heat released from the main steam and transform into industrial steam. The saturated steam produced by the evaporator,

Table 2. Comparison of main parameters of different reactor types.

Reactor type	"Hualong One" large PWR [24, 25]	"Linglong One" SMR [26]	"HTR-PM600S" HTGR [27, 28]
Thermal power (MWt)	3180	385	1500
Electrical power (MWe)	1200	125	670
Main steam temperature (°C)	284.0	293.8	571.0
Main steam pressure (MPa)	6.8	4.5	13.9
Main steam flow (t/h)	6382.8	596.8	2138.4
Maximum steam supply pressure (MPa)	5.4	3.5	12.5
Maximum steam supply temperature (°C)	268.8	270	540
Suitable users for independent steam supply	Large capacity, low parameter users	Small capacity, low parameter users	Small capacity, high parameter users

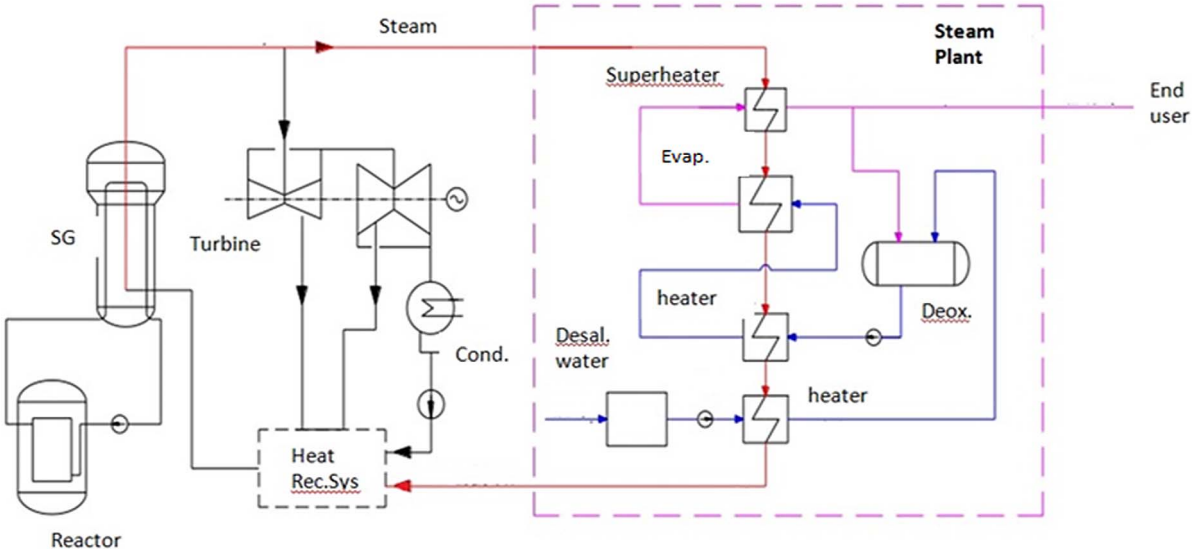

Fig. 4. Basic principle diagram of nuclear steam supply.

after being superheated in the heater, merges into the industrial steam header and is transported through the plant's industrial steam pipeline to the off-site steam long-distance pipeline network. During the transportation of steam, the long-distance pipeline network will experience certain temperature and pressure losses. Through optimized routing, the steam ultimately reaches the industrial users.

To address the high-parameter, large-capacity steam requirements of large petrochemical parks, it is also possible to meet various clean steam demands by coupling large PWR with other high-temperature heat sources such as HTGR and electric heating. In terms of coupling with high-temperature reactors, the advantages of PWR's lower steam parameters, large thermal power, and good economic performance, as well as the high steam parameters of HTGR, can be fully utilized. When combining the two types of reactors, PWR is used to produce saturated industrial steam, and then the high-parameter steam from the HTGR reactor is used to superheat the saturated industrial steam. Steam conversion technology is also employed during the heat transfer process to ensure the safety of the steam supply (see Fig. 5).

In terms of coupling with other high-temperature heat sources, current technical research indicates that electric heating is one of the more recommended methods among various coupling approaches. Electric heating units are characterized by their good carbon reduction benefits, high energy utilization rates, high heating temperatures, flexible deployment, and mature technology. In the petrochemical industry, electric heaters have already been widely applied. During the coupling process, the abundant heat source generated by PWR is utilized for initial heating, while the electric heating units provide superheating. Preliminary research results show that the combination of PWRs and electric heating units can achieve medium-temperature and medium-pressure steam levels. This approach offers more flexibility in leveraging existing steam supply modifications and expanding market applications (see Fig. 6).

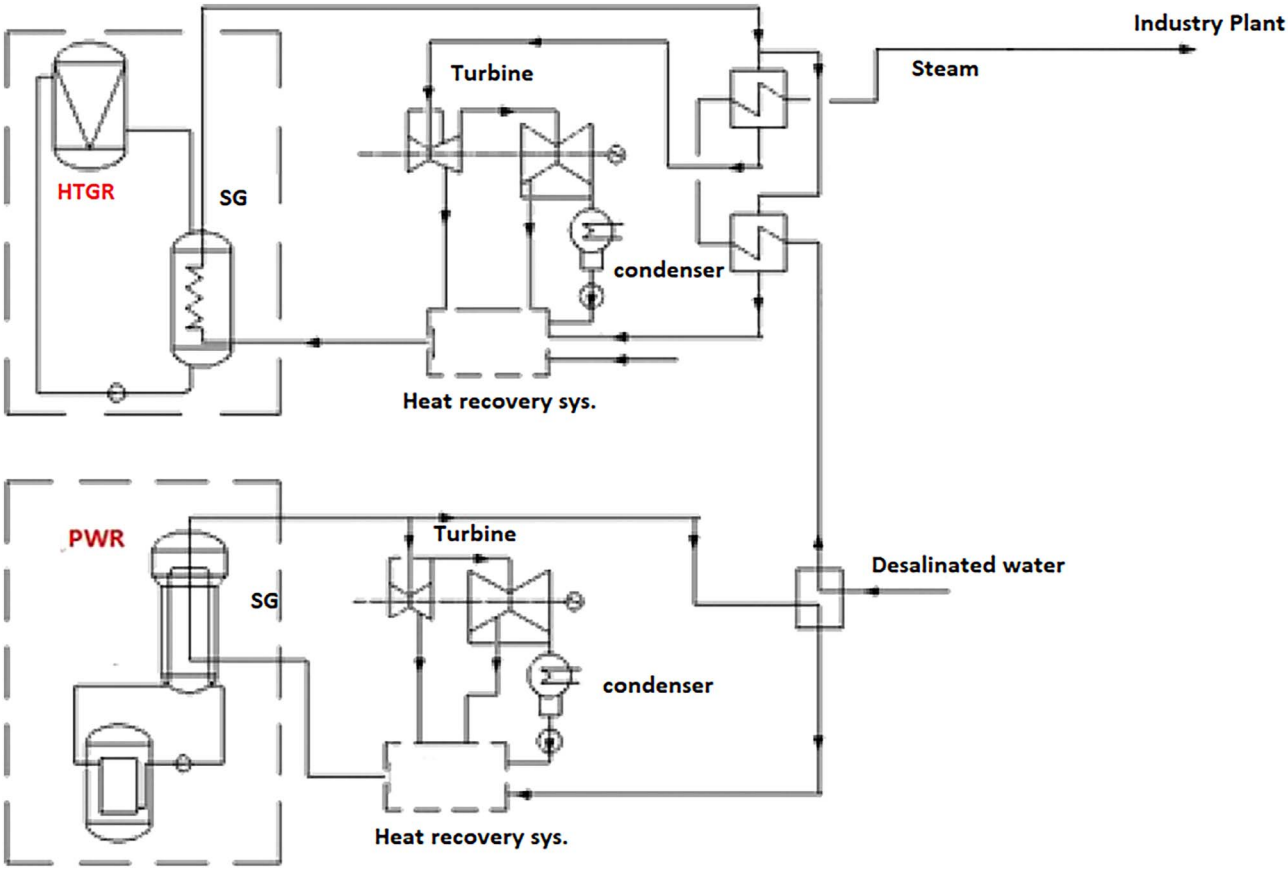

Fig. 5. Flowchart of steam supply technology coupling multiple reactor types.

2.2 Nuclear district heating

2.2.1 Nuclear heating as a stable heat source for regions

Heating in northern China still primarily relies on fossil fuels, with buildings and non-process industries having a heat demand of 13 billion GJ below 150 °C, indicating a significant need for carbon reduction in heating [29, 30].

During the "14th Five-Year Plan" period, clean heating in northern regions has been actively and steadily promoted. Nuclear heating projects at the Haiyang Nuclear Power Plant in Shandong, the Qinshan Nuclear Power Plant in Zhejiang, and the Hongyanhe Nuclear Power Plant in Liaoning have already achieved heating coverage over 5 million square meters [31, 32] (see Table 3).

In 2019, the first phase of the Haiyang nuclear heating project, covering 700,000 square meters, was completed and put into operation. In 2021, the second phase was operational, providing heating for 4.5 million square meters of the entire urban area of Haiyang, serving 200,000 residents. This made Haiyang the first "zero-carbon" heating city in China. With the completion and operation of six additional units, the expected heating area is expected to exceed 200 million square meters, with a heating radius reaching 100 km, serving the main urban areas of Yantai, Qingdao, and Rongcheng.

Taking the Qinshan Nuclear Power Plant as an example, in November 2021, it began providing heating for 4,000 households, covering an area of 460,000 square meters. The plan is to fully complete the demonstration project by 2025, which will be able to meet the heating needs of about 4 million square meters in the main urban area of Haiyan and other places. This is equivalent to reducing the combustion of approximately 24,600 tons of standard coal annually, and reducing emissions of sulfur dioxide by 1,817 tons, nitrogen oxides by 908 tons, and carbon dioxide by 59,000 tons [33].

The carbon reduction benefits of nuclear heating are significant, and its social benefits are also positive.

In terms of low-temperature heating reactors, the NHR200-II low-temperature heating reactor and the Hemei No. 1 SMR nuclear heating project are both being actively and orderly developed.

Globally, the research and application of nuclear heating have also become very mature. In the mid-1950s, the Swedish ASEA-Atom Company designed and built the world's first prototype reactor mainly used for district heating – the Agesta heating reactor. In the 1970s, the former Soviet Union designed and built eight cogeneration reactors involving various reactor types. Today, nuclear heating applications have reached a certain scale. As of December 2023, more than 50 operational nuclear power units worldwide have adopted cogeneration, providing district heating while generating electricity. Countries that have promoted the application of nuclear heating are

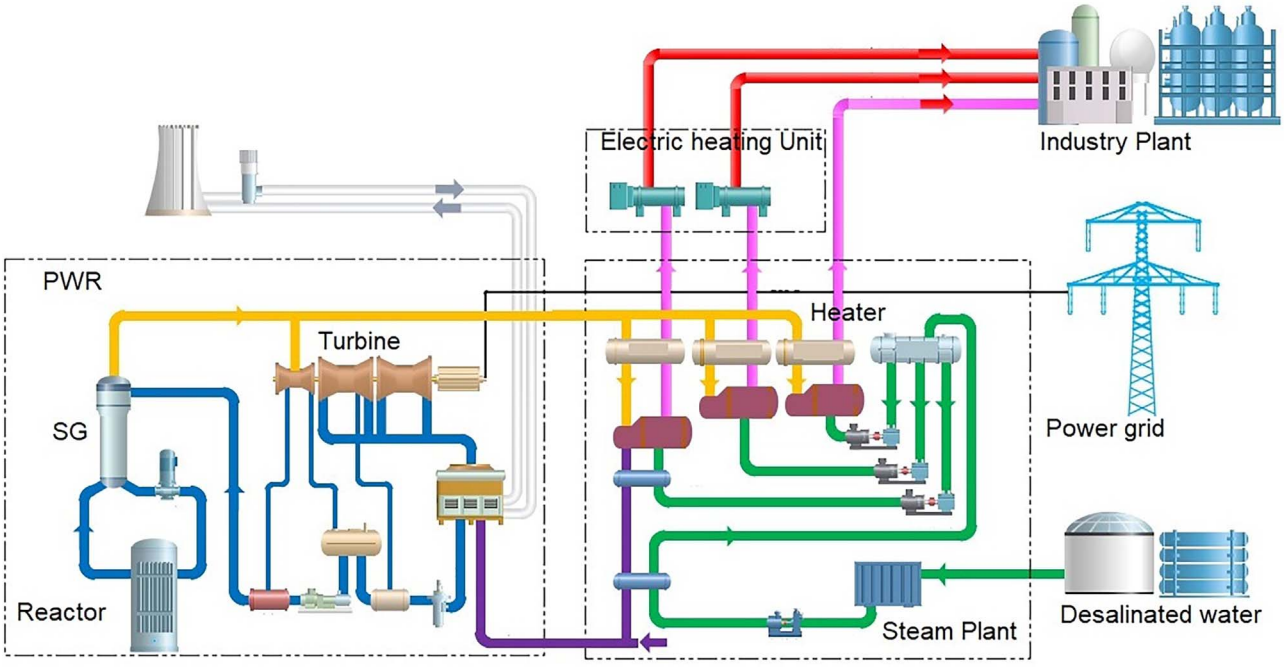

Fig. 6. Flowchart of steam supply technology coupling PWR with electric heating.

Table 3. Domestic residential heating project status (as of December 2023).

Nuclear power base	Commissioning date	Heating load (MW)	Heating area (m^2)	CO^2 emissions reduction (tons/season)
Haiyang Nuclear Power	2019	202.5	4.5 million	330,000
Qinshan Nuclear Power	2021	37.5	460,000	27,000
Hongyanhe Nuclear Power	2022	12.77	242,400	14,000

mostly located in high-latitude regions, such as the former Soviet Union, Germany, Canada, Sweden, Denmark, France, and Switzerland, almost all of which are located north of 43°N, characterized by severe winters and long heating periods. The types of reactors used are diverse, including pressurized water reactors, heavy water reactors, fast reactors, and high-temperature gas-cooled reactors (see Table 4).

2.2.2 Nuclear heating technology

Nuclear heating mainly consists of two methods: steam extraction heating and low-temperature heating reactors. Steam extraction heating utilizes steam from the reactor's secondary loop or auxiliary steam system as a heat source, which is then used for the first heat exchange with the thermal network's circulating water at the heating primary station. The circulating water in the thermal network is then transported through the pipeline to the secondary heat exchange station, where it undergoes a second heat exchange with the user side. The heating system achieves multiple isolations between the primary and secondary loops of the nuclear power plant, the secondary loop and the thermal network circulating water loop, and the thermal network circulating water loop and the user side loop. During the heat exchange process, only heat is transferred, and there is no direct contact between the media. A pressure difference is maintained between the water and steam sides of the heat exchanger at the primary station to ensure that in the event of a leak, water flows from the water side to the steam side and does not disperse outside the plant. In addition to the existing monitoring of the secondary side of the evaporator and the main steam radiation at the nuclear power station, an online monitoring device and isolation valve are added before the hot water leaves the primary station. Through these multiple measures, the safety of nuclear heating is ensured (see Fig. 7).

Low-temperature heating reactor technology is specifically designed for heating purposes, based on technologies such as shell-type reactors or pool-type reactors. It is primarily divided into pool-type low-temperature heating reactors and shell-type low-temperature heating reactors. Typical models include the China National Nuclear Corporation's (CNNC) "Yanlong" pool-type low-temperature heating reactor [34], Tsinghua University's NHR200-II low-temperature nuclear heating reactor, and the State Power Investment Corporation's (SPIC) Hemei No. 1.

Table 4. Operational nuclear power plants used for nuclear heating in the world.

Country	Reactor name	Reactor type	Model
1. Bulgaria	KOZLODUY 5/6	PWR	VVER V-320
2. China	HAIYHANG1/2	PWR	AP1000
3. Czech Republic	TEMELIN1/2	PWR	VVER V-320
4. Hungary	PAKS2-4	PWR	VVER V-213
5. Romania	CERNAVODA1/2	PHWR	CANDU 6
6. Russsia	NOVOVORONEZH4	PWR	VVER V-179
	KOLA1/2	PWR	VVER V-230
	BILIBINO2-4	LWGR	EGP-6
	NOVOVORONEZH5	PWR	VVER V-187
	BELOYARSK 3	FBR	BN600
	KURSK2-4	LWGR	RBMK-1000
	SMOLENSK1-3	LWGR	RBMK-1000
	KALININ1/2	PWR	VVER V-338
	KOLA-3/4	PWR	VVER V-213
	LENINGRAD-3/4	LWGR	RBMK-1000
	KALININ3/4	PWR	VVER V-320
	BALAKOVO-1-4	PWR	VVER V-320
7. Slovakia	BOHUNICE-3/4	PWR	VVER V-213
8. Switzerland	BEZNAU-1/2	PWR	WH 2LP
9. Ukraine	ZAPOROZHYE-5/6	PWR	VVER V-320
	RIVNE-1-2	PWR	VVER V-213
	RIVNE-3	PWR	VVER V-320
	KHMELNITSKI-1/2	PWR	VVER V-320
	SOUTH UKRAINE 1-3	PWR	VVER V-302/338/320
	ZAPOROZHYE-1-4	PWR	VVER V-320
	RIVNE-4	PWR	VVER V-320

Low-temperature heating reactors transfer the core heat to be used for heating through three loops. Among them, shell-type reactors have a higher outlet water temperature and can be used for both heating and industrial steam supply, but they have a longer construction period. Pool-type reactors have relatively lower construction costs and shorter construction periods, and their location can be closer to urban users, but they have lower heating parameters and can only meet residential heating needs.

2.3 Nuclear hydrogen production

2.3.1 Nuclear hydrogen production as a source of green hydrogen for industry and transportation

Development of clean hydrogen energy in China is currently in an active exploration phase, with national and local governments successively introducing a series of policies to support its growth [35–39]. Nuclear energy has the capability to stably and continuously produce large amounts of clean hydrogen. Internationally, there is ongoing active research in nuclear hydrogen production, and demonstration applications have been conducted.

Tianwan Nuclear Power Plant took the lead in conducting a demonstration of proton exchange membrane electrolysis (PEM) for hydrogen production in 2024. The complete system has undergone startup trials, and the hydrogen gas produced, after purification, can achieve a concentration of 99.999%. The Institute of Nuclear and New Energy Technology at Tsinghua University has built a thermochemical iodine-sulfur cycle hydrogen production test rig, IS-100, with a production rate of 100 L/h. The system has completed 86 hours of continuous operation, with 60 hours dedicated to hydrogen production. The Shanghai Institute of Applied Physics of the Chinese Academy of Sciences developed a 5 kW high-temperature electrolysis hydrogen production system in 2015, conducted a mid-scale trial of a 20 kW high-temperature electrolysis hydrogen production device in 2018, and carried out a 202 kW high-temperature electrolysis hydrogen production test in 2023, achieving a production rate of 64 Nm3/h [40]. They also plan to conduct trials for nuclear hydrogen production based on molten salt reactors.

Globally, the main nuclear countries such as America, Russia, France and United Kingdom are also making effort in the practice of nuclear hydrogen production [41]. The Nine Mile Point Nuclear Generating Station, a PWR in the United States, has successfully constructed a 1.25-megawatt nuclear hydrogen production demonstration in 2023 [42]. This project utilizes proton exchange

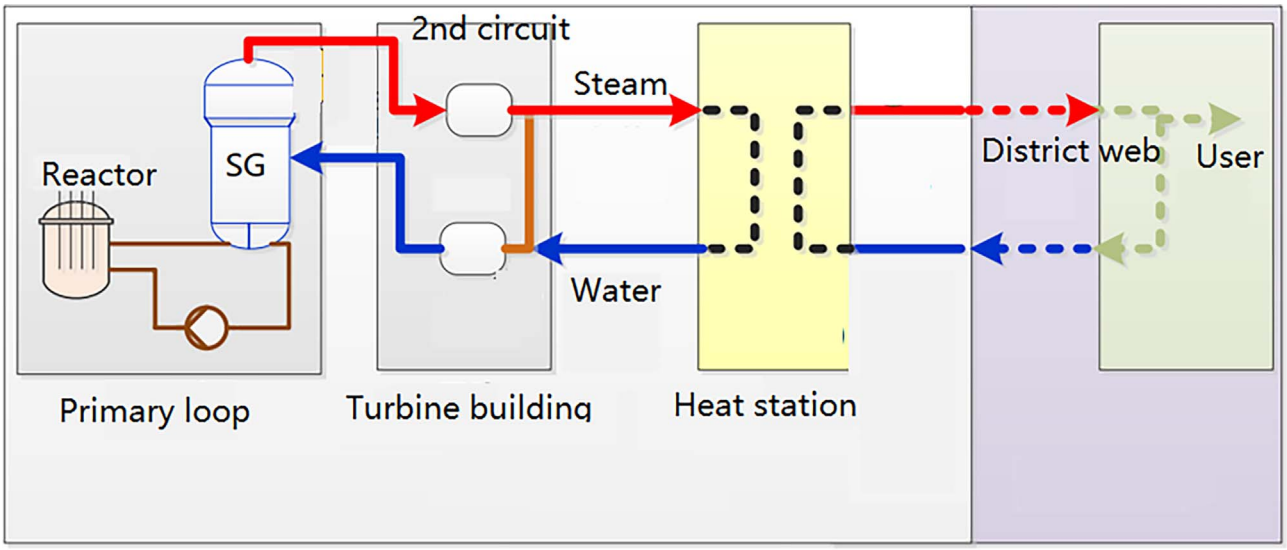

Fig. 7. Flowchart of steam extraction heating technology.

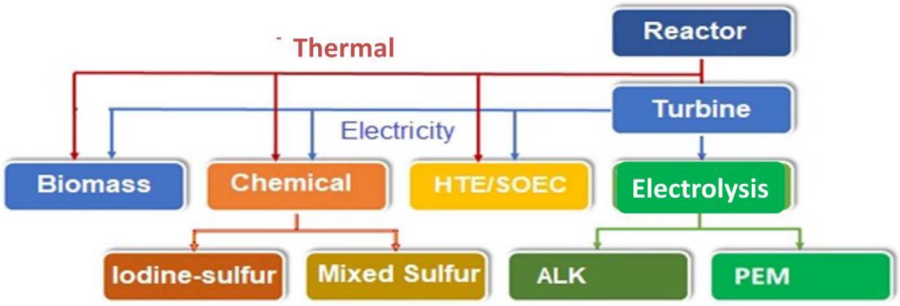

Fig. 8. Nuclear hydrogen production technology route.

membrane electrolysis technology to achieve a daily hydrogen production of 560 kg. The U.S. Department of Energy is also planning to reduce the cost of nuclear hydrogen production and is currently conducting research on high-temperature electrolysis technology for hydrogen production using nuclear energy. Russia has prioritized hydrogen energy as a strategic national technology, with plans to implement electrolytic hydrogen production at existing nuclear power plants in the near term and to utilize high-temperature gas-cooled reactors for hydrogen production in the long term. France, which has the highest proportion of nuclear energy in the world, places significant emphasis on nuclear hydrogen production. The "France 2030 Plan" released in 2021 indicates that France will invest 2.3 billion euros to promote the development of electrolytic hydrogen production technology, aiming to build at least two million-kilowatt-level electrolytic hydrogen projects by 2030, thereby leveraging France's strengths as a major nuclear energy nation in the field of nuclear hydrogen production. The United Kingdom's approach to nuclear hydrogen production is also dual-pronged. In the short term, it focuses on demonstrating and applying hydrogen production at operational nuclear power plants, while in the medium- o long-term, it prioritizes high-temperature gas-cooled reactors for hydrogen production. In May 2021, the UK Nuclear Industry Association announced its "Hydrogen Roadmap," setting a goal for nuclear hydrogen production to meet one-third of the country's hydrogen demand by 2050. The under-construction Hinkley Point C Nuclear Power Plant in the UK is planned to be equipped with large electrolyzers. The UK-based Ultra Safe Nuclear Corporation is also developing an improved micro-reactor based on existing miniature high-temperature gas-cooled reactors for hydrogen production demonstrations. The Japan Atomic Energy Agency has completed a mid-scale trial of the I-S cycle for hydrogen production, achieving a production rate of 150 L/h. Canada, South Korea, and other countries are also actively exploring nuclear hydrogen production.

2.3.2 Nuclear hydrogen production technology

Nuclear hydrogen production can participate in hydrogen generation by providing forms of energy such as heat or electricity, including thermochemical hydrogen production, high-temperature steam electrolysis hydrogen production,

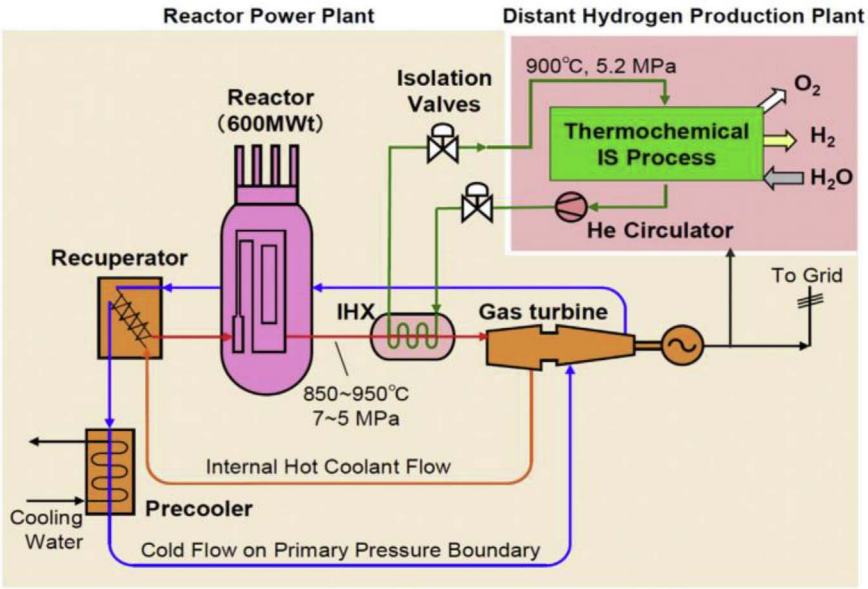

(a) IS Cycle Technology

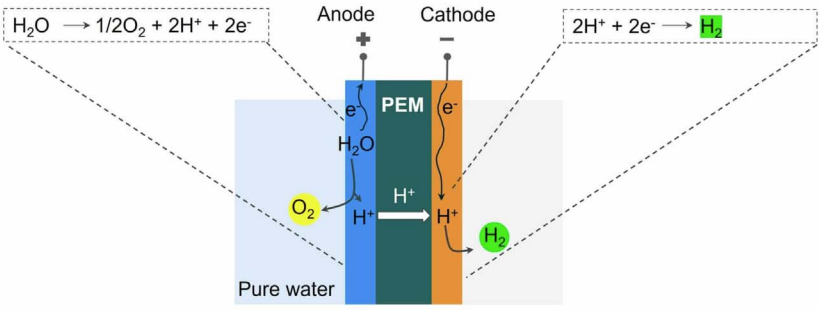

(b) PEM Electrolysis Technology

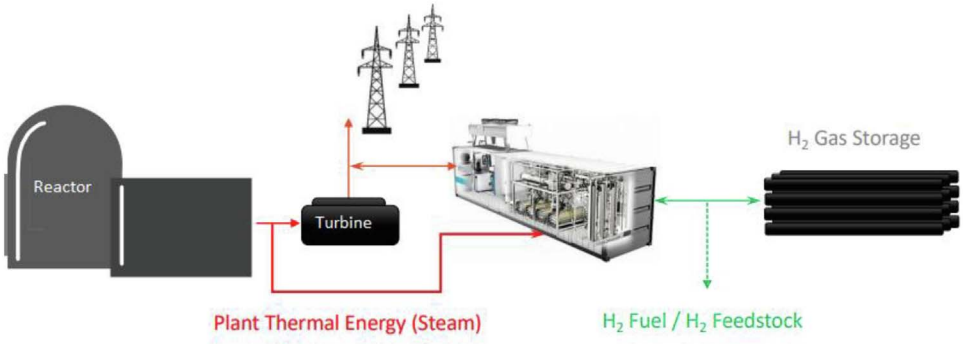

(c) SOEC Electrolysis Technology

Fig. 9. Main technologies for nuclear hydrogen production. (a) IS Cycle Technology; (b) PEM Electrolysis Technology; (c) SOEC Electrolysis Technology.

and low-temperature water electrolysis hydrogen production (see Fig. 8).

High-temperature steam electrolysis (HTSE) for hydrogen production uses solid oxide electrolysis cells (SOEC) as the core reactor, achieving efficient decomposition of steam to produce hydrogen. This method can fully utilize the high-temperature heat and electricity generated by the reactor. Several major countries around the world have listed this technology as a key development direction for the future. Thermochemical cycle hydrogen production is another efficient hydrogen production technology. It prepares hydrogen through high-temperature thermochemical

Table 5. Operational nuclear power plants used for desalination in China.

Project name	Desalination capacity	Technology
Fujian Ningde Nuclear Power Plant	15,000 m^3/d	RO
Liaoning Hongyanhe Nuclear Power Plant	10,200 m^3/d	RO
Zhejiang Sanmen Nuclear Power Plant	17,000 m^3/d	RO
Shandong Haiyang Nuclear Power Plant	16,800 m^3/d	RO
Fujian Xiapu Nuclear Power Plant	6,800 m^3/d	RO
Liaoning Xudabao Nuclear Power Plant	23,000 m^3/d	RO
Hainan Changjiang Small Reactor	2 × 3,000 m^3/d	Low-temperature multi-effect distillation

Table 6. Operational nuclear power plants used for desalination worldwide (data as of December 2023).

Country	Reactor name	Reactor type	Model
1. India	MADRAS 2	PHWR	HORIZONTAL PRE
2. Japan	TAKAHAMA 3/4	PWR	M 3LOOP
	GENKAI 3	PWR	M 4 LOOP
	IKATA3	PWR	M 3LOOP
	OHI 3/4	PWR	M 4 LOOP

cycle processes of steam cracking, mainly including the iodine-sulfur (IS) cycle route and the hybrid sulfur cycle route, which generally require operation at temperatures above 900 °C. This method is still under further development due to issues such as working temperature, scaling, and material corrosion. Conventional water electrolysis technology is relatively mature and can directly utilize the electricity generated by the reactor, such as proton exchange membrane (PEM) water electrolysis technology. Although its efficiency is not as high as that of high-temperature steam electrolysis and thermochemical cycle hydrogen production, its flexibility is stronger, making it one of the main methods for hydrogen production from new energy sources such as wind and solar. At present, the economic benefits of nuclear hydrogen production are not yet apparent (see Fig. 9).

2.4 Desalination

2.4.1 Desalination provides additional water sources for water-scarce regions

Desalination involves the removal of salt from seawater to produce freshwater, representing a technology for increasing water resource availability and augmenting the total freshwater supply. In northern coastal provinces and cities of China, the per capita annual water resources are severely insufficient. During the "14th Five-Year Plan" period, both the national government and coastal provinces have introduced policies and plans for the development of the desalination industry.

The nuclear desalination in China has been successfully applied in multiple nuclear power plants and is highly mature. Domestic nuclear power plants widely use desalination technology to provide water for production or daily use (see Table 5). For instance, nuclear power plants in Ningde, Fujian; Hongyanhe, Liaoning; Sanmen, Zhejiang; and Haiyang, Shandong, employ reverse osmosis membrane processes. Additionally, the small reactor in Changjiang, Hainan, and the high-temperature gas-cooled reactor are conducting research on thermal desalination using nuclear steam or hot water [43, 44]. In 2021, Haiyang Nuclear Power Plant, in collaboration with Tsinghua University, completed a "simultaneous production and delivery of water and heat" demonstration project. This project utilizes the extracted steam and waste heat from the nuclear power unit to drive the production of 5 tons per hour of hot fresh water at 95 °C, meeting drinking water standards, for heating and water supply in the expert village [45].

Several countries abroad have also conducted design and engineering research on nuclear desalination for different types of reactors, accumulating approximately 200 reactor-years of experience in nuclear desalination. This approach is considered a viable option to meet the growing demand for drinking water and has provided hope for many arid and semi-arid regions that suffer from severe water scarcity [46–48]. According to incomplete statistics from the IAEA, the operational power plants used for desalination worldwide are shown in Table 6.

2.4.2 Desalination technology

Based on the type of energy utilized, nuclear desalination technology can be divided into two categories: one that uses thermal energy, such as driving distillation desalination devices with steam extraction from condensing steam turbines or exhaust steam from back-pressure steam turbines, including technologies like multi-stage flash (MSF) and low-temperature multi-effect (MED); and another that uses electrical energy to power desalination devices, such as reverse osmosis (RO), (see Fig. 10). The mainstream desalination technologies adopted currently in China is reverse

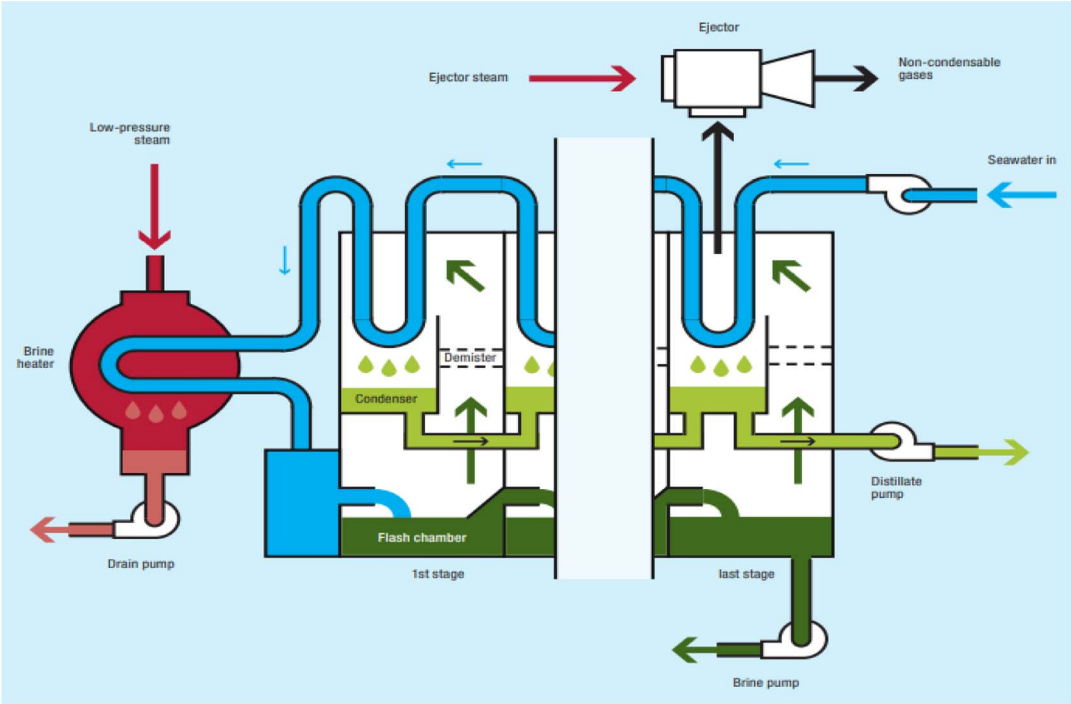

(a) Multi-StageFlash(MSF)

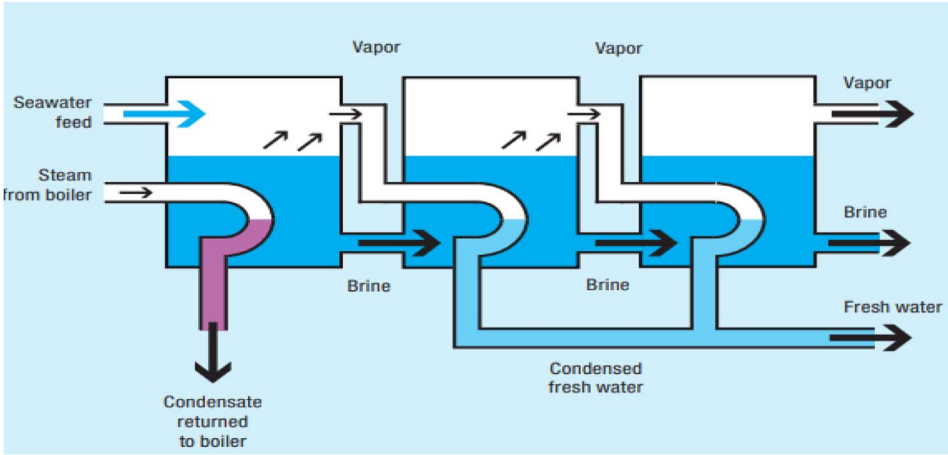

(b) Multi-EffectDistillation(MED)

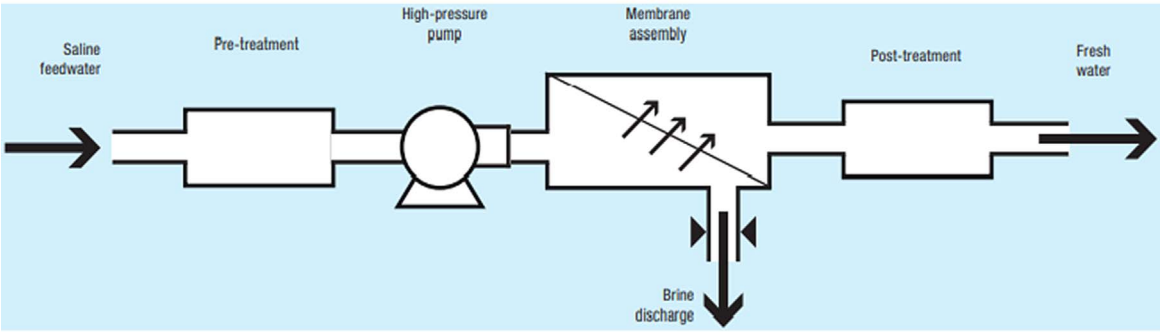

ReverseOsmosis(RO)

Fig.10. Main desalination technologies. (a) Multi-stage flash (MSF); (a) Multi-effect distillation (MED); Reverse osmosis (RO).

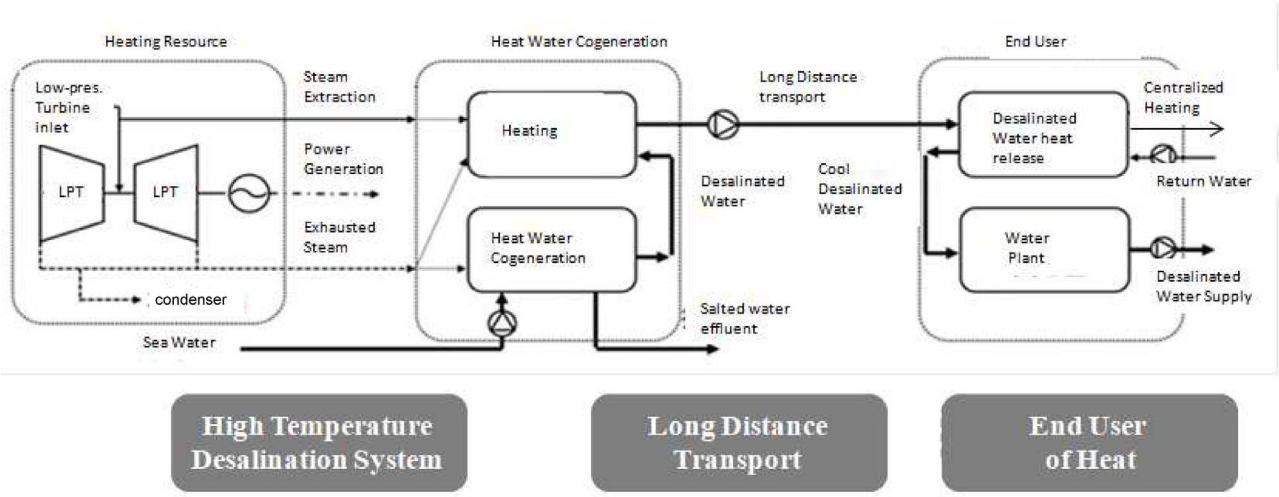

Fig. 11. Large-scale long-distance heating and simultaneous water and heat transmission using waste heat.

Table 7. Waste heat utilization technologies.

Item	Heat pump	High back-pressure heating	Light shaft heating	New condensing extraction B-P heating
Main Retrofit Content	Circulating water system, extraction system	Steam turbine body, condenser, circulating water system	Steam turbine body	Intermediate and low-pressure cylinder connection pipe, steam turbine body retrofit
Technical Features	Flexible regulation, requires new factory construction	Need to replace low-pressure cylinder rotor during heating season, open cylinder twice a year	Need to replace low-pressure cylinder rotor during heating season, open cylinder twice a year	Flexible regulation, small scope of changes, in the promotion stage
Current Application Status	Mature technology, many cases	Mature technology, many cases	Generally mature, used in small units	Initial stage, only a few power plants have successfully operated for one heating season

osmosis technology (RO). Key components of membrane-based processes, such as reverse osmosis membrane modules, high-pressure pumps, and energy recovery devices, require further technological advancement. Additionally, desalination technologies based on waste heat utilization and the utilization of brine are also being actively explored [49]. At present, due to the relatively easy availability of freshwater resources in China, desalination has not yet formed large-scale applications, and its scale economic benefits are not yet apparent.

2.5 Waste heat utilization

2.5.1 Waste heat utilization provides technical support for the construction of a circular economy

Waste heat utilization from nuclear energy involves using the residual heat generated by nuclear power plant reactors after electricity production to provide energy. Conventional nuclear power plants release over 60% of their thermal energy into the environment as waste heat, indicating a significant potential for waste heat utilization.

Waste heat utilization can achieve simultaneous water and heat transmission (see Fig. 11), long-distance heating and cooling with large temperature differences [50, 51], ice melting, aquaculture, cross-seasonal energy storage, LNG vaporization and efficient seawater desalination. This can enhance energy utilization efficiency while effectively reducing the temperature of power plant thermal discharges, thereby improving the marine environment's friendliness.

At present, domestic practices of waste heat utilization encompass applications in heating, seawater desalination, ice melting through recirculation, and aquaculture. The Haiyang Nuclear Power Plant has achieved the simultaneous production and transmission of water and heat through waste heat utilization. The Hainan Nuclear Power Plant utilizes waste heat for pearl farming, thereby realizing significant economic benefits. The Daya Bay Nuclear Power

Plant is engaged in coral conservation and research on mangrove protection. The Xudapu Nuclear Power Plant plans to employ waste heat for ice melting through recirculation, effectively assisting with the plant's water supply [52, 53].

2.5.2 Waste heat utilization technology

In the process of waste heat utilization, technologies such as heat pumps and back-pressure steam turbines deserve special attention. A heat pump is an energy utilization device that enables the transfer of heat from a low-temperature object to a high-temperature object. Back-pressure steam turbine technology significantly improves overall energy utilization efficiency by eliminating losses at the cold end. The main technologies for back-pressure unit retrofitting include high back-pressure heating technology, light shaft heating technology, and new condensing extraction back-pressure heating technology. Among these, the new condensing extraction back-pressure technology is a heating technology that can flexibly switch between pure condensation, extraction, and back-pressure conditions online (see Table 7).

3 Conclusion

Nuclear energy comprehensive utilization plays a crucial role in addressing global climate change and achieving the "dual carbon" goals. Through the comprehensive utilization of nuclear energy, it is possible to significantly enhance energy efficiency and reduce greenhouse gas emissions, providing green energy solutions for industries and heating. The domestic nuclear energy industry is building an integrated smart energy system based on nuclear energy. In the future, renewable energy sources can be consumed locally and combined with electricity, heat, cold, gas and water to form a multi-product integrated energy system to maximize energy efficiency.

However, the development of nuclear energy comprehensive utilization still faces numerous challenges, including untapped technological potential, limited application fields, the need for improved economic viability, and the necessity for enhanced market promotion and collaboration.

In the future, the nuclear energy industry will continue to advance the development of advanced technologies and innovative applications in the comprehensive utilization of nuclear energy, intensifying research and development efforts to capture technological high ground and drive industrial implementation. It is expected that nuclear energy comprehensive utilization will make greater progress in the following areas:

Technological innovation and breakthroughs

With the continuous development of various reactor technologies, more efficient and safer technical support will be provided for the comprehensive utilization of nuclear energy. A range of advanced and cutting-edge technologies will see innovative development. For example, intelligent control technologies for nuclear energy comprehensive utilization, pressurized water reactor coupling with multiple high-temperature heat sources for steam supply, heating and cooling technologies based on waste heat, coupling high-temperature steam electrolysis hydrogen production technology, and efficient seawater desalination methods. Additionally, there is a need for further development of smart energy system technologies, as well as methods and models for economic evaluation.

Expansion of application fields

The application fields of nuclear energy comprehensive utilization will continue to expand, not limited to traditional industrial steam supply and heating, but also potentially applied to data centers, transportation, agriculture, and other areas. For instance, in the data center sector, nuclear energy can provide stable electricity and cooling water, reducing the energy consumption and carbon emissions of data centers; in the transportation sector, nuclear hydrogen production can supply clean hydrogen fuel for fuel cell vehicles, promoting the green transformation of the transportation industry; in agriculture, nuclear energy can assist in aquaculture, mangrove cultivation, and the production of pesticides and fertilizers. In terms of application forms, as technology progresses, existing and planned power plants will use multiple technical routes to provide comprehensive energy supply to surrounding areas, forming a green integrated development model.

Enhanced economic viability and cost reduction

With technological advancements and scaled application, the economic viability of nuclear energy comprehensive utilization will be significantly improved, giving it a competitive edge in the market. Furthermore, by optimizing design, applying intelligent technologies, increasing the domestic production rate of equipment, and reducing operational and maintenance costs, the investment and operational costs of nuclear energy comprehensive utilization projects can be further lowered, enhancing their economic benefits and market competitiveness.

4 Recommendation

Increase R&D investment and innovation

Greater investment should be made in the research and development of comprehensive nuclear energy utilization technologies to promote breakthroughs and innovations in key technologies. Priority support should be given to the development of advanced reactor types such as HTGR, SMR, and advanced PWR technologies. Additionally, it is important to strengthen the transformation and application of scientific and technological achievements, and to enhance international cooperation and exchange of experiences to capture the technological high ground in the comprehensive utilization of nuclear energy.

Improve Regulatory and Standard System: Establishing and perfecting the standard system for the comprehensive

utilization of nuclear energy is an important foundation for promoting its development. Firstly, it is necessary to formulate and improve technical standards for the comprehensive utilization of nuclear energy, covering various aspects such as steam supply, heating, hydrogen production, and seawater desalination, to ensure the reliability and consistency of nuclear energy comprehensive utilization technologies. Secondly, strengthen the construction of safety standards for the comprehensive utilization of nuclear energy by establishing strict safety regulations and operating procedures to ensure its safety and controllability. In addition, improve the economic evaluation standards for the comprehensive utilization of nuclear energy by establishing a scientific and reasonable economic evaluation index system and methods, to provide a basis for investment decisions and economic evaluations of nuclear energy comprehensive utilization projects, and promote the improvement of their economic benefits and sustainable development.

Strengthen industry collaboration and cooperation

Promote the deep integration of nuclear energy with related industries and enhance cooperation along the industrial chain to facilitate the implementation and application of nuclear energy comprehensive utilization projects. Use technology as a driving force to lead demonstration applications, further strengthen communication and cooperation with local governments and high-energy-consuming industrial clusters, enhance publicity and promotion, and collaborate with relevant departments and enterprises to promote the planning and implementation of nuclear energy comprehensive utilization projects. Conduct surveys and preliminary work around key plant sites to understand user characteristics and advance development and application on-site, effectively tapping into the potential of nuclear energy and leveraging its advantages. Strengthen cooperation between nuclear energy equipment manufacturing enterprises and nuclear energy operating enterprises to improve the performance of key equipment such as heat exchangers and turbines, reducing equipment costs and operational costs. Better serve China's energy green and low-carbon transformation, making greater contributions to sustainable development.

Strengthen talent cultivation and team building

The development of nuclear energy comprehensive utilization requires a large number of interdisciplinary talents and technical teams. It is necessary to strengthen the training and team building of relevant talents to improve their overall quality and innovation capabilities. For example, enhance the construction of nuclear energy-related majors in universities and research institutions to cultivate high-quality talents in nuclear energy comprehensive utilization; strengthen technical training and talent cultivation in nuclear energy enterprises to improve the professional level and innovation capabilities of technical teams; establish mechanisms for the introduction and incentive of nuclear energy comprehensive utilization talents to attract and retain outstanding talents, providing a talent guarantee for the development of nuclear energy comprehensive utilization.

Strengthen popularization and public communication

The comprehensive utilization of nuclear energy encompasses multiple domains, including electricity generation, heat supply, seawater desalination, and hydrogen production, thereby conferring significant advantages in terms of energy efficiency and decarbonization environmental benefits. Moreover, its integration with other industries and proximity to the public are increasingly pronounced. However, public perception of nuclear energy is often confined to the electricity-generating function of nuclear power plants, with a lack of comprehensive understanding of the potential and safety of its comprehensive utilization. The existing nuclear energy popularization and public communication systems are inadequate in content and form, failing to meet the public's cognitive needs regarding the diversified applications of nuclear energy. Therefore, incorporating the comprehensive utilization of nuclear energy into popular science and public communication systems is not only an imperative for the development of nuclear energy but also a crucial measure to enhance public scientific literacy. In the future, it is necessary to strengthen the interactive communication between the comprehensive utilization of nuclear energy and the public through more diversified content, simplified language, and varied dissemination formats, thereby creating a favorable social environment for the sustainable development of nuclear energy. This will facilitate the widespread application of nuclear energy technology and contribute to the realization of global energy transition and sustainable development goals.

Funding

This research received no external funding.

Conflicts of interest

The authors declare that they have no conflict of interest.

Data availability statement

No data are associated with this article.

Author contribution statement

Ji Xing is dedicated to supervision. Li Fan is dedicated to conceptualization. Ping Wang is dedicated to Writing-Original Draft and Investigation. Yibo Luo is dedicated to Investigation. Zhipeng Guo is dedicated to Writing-Review.

References

1 IPCC, *IPCC and the sixth assessment cycle* (2020). Available at https://www.ipcc.ch/site/assets/uploads/2020/AC6_zh.pdf.
2 State Council of China, *Opinions on fully, accurately, and comprehensively implementing the new development concept to achieve carbon peak and carbon neutrality* (2021). Retrieved December 24, 2024, available at https://www.gov.cn/zhengce/2021–10/24/content_5644613.htm.

3 State Council of China, *Notice on issuing the action plan for carbon peak before 2030* (2021). Available at https://www.gov.cn/zhengce/content/2021-10/26/content_5644984.htm.

4 International Atomic Energy Agency (IAEA), *INES: International nuclear and radiological event scale user's manual* (n.d.). Available at https://www.iaea.org/zh/publications/8778/inesguo-ji-he-he-fang-she-shi-jian-fen-ji-biao-shi-yong-zhe-shou-ce.

5 International Energy Agency (IEA), *Electricity statistics* (2024). Retrieved December 24, 2024, available at https://www.iea.org/energy-system/electricity/nuclear-power.

6 International Atomic Energy Agency (IAEA), *Nuclear power reactors database* (2024). Retrieved December 24, 2024, available at https://pris.iaea.org/pris.

7 China Nuclear Energy Association (CNEA), *China nuclear energy development report* (2024). Retrieved December 24, 2024, available at https://www.china-nea.cn/site/content/44708.html.

8 China Nuclear Energy Association (CNEA), *China nuclear energy development report* (2023). Available at https://img.china-nea.cn/e-book/lps/lps2023/mobile/index.html#p=2.

9 National Energy Administration (NEA), *Coal consumption for power generation in China from January to November 2023* (2023). Retrieved December 24, 2024, available at https://www.nea.gov.cn/2023-12/20/c_1310756286.htm.

10 National Bureau of Statistics, *Emissions calculation* (n.d.). Retrieved December 24, 2024, available at https://www.stats.gov.cn/.

11 International Atomic Energy Agency (IAEA), *Nuclear power reactors in the World* (2023). Available at https://www-pub.iaea.org/MTCD/Publications/PDF/RDS-2-43_web.pdf.

12 State Council of China, *Outline of the fourteenth five-year plan for national economic and social development and the long-range objectives through the year 2035* (2021). Available at https://www.gov.cn/xinwen/2021-03/13/content_5592681.htm.

13 National Development and Reform Commission, *National energy work conference held in Beijing* (n.d.). Available at https://www.ndrc.gov.cn/fzggw/wld/zsj/zyhd/202412/t20241215_ 1395026.html.

14 National Energy Administration (NEA), *Nuclear energy steam supply opens new application scenarios for industries* (2024). Retrieved December 24, 2024, available at https://www.nea.gov.cn/2024-07/19/c_1310782069.htm.

15 National Development and Reform Commission, *Notice on issuing the energy efficiency benchmark and base levels for key industrial fields (2023 Edition)* (2023). Available at https://www.gov.cn/zhengce/zhengceku/202307/content_6890009.htm.

16 State Council of China, *Energy conservation and carbon reduction action plan for 2024–2025* (2024). Retrieved December 24, 2024, available at https://www.gov.cn/zhengce/content/202405/content_6954322.htm.

17 National Development and Reform Commission, *Modern energy system plan for the 14th five-year plan* (2022). Retrieved December 24, 2024, available at https://www.gov.cn/zhengce/zhengceku/2022-03/23/content_5680759.htm.

18 OECD-NEA, *Beyond electricity: the economics of nuclear cogeneration* (2022). Available at: https://www.oecd-nea.org/upload/docs/application/pdf/2022-07/7363_cogen.pdf

19 World Nuclear Association, *Non-power nuclear applications* (2024). Available at https://world-nuclear.org/origindigital.co/information-library/non-power-nuclear-applications.

20 Nuclear Energy Agency, *Nuclear energy steam supply opens new application scenarios for industries* (n.d.). Available at https://www.nea.gov.cn/2024-07/19/c_1310782069.htm.

21 China Atomic Energy Science Academy (CAEA), *China's first industrial nuclear steam supply project "Heqi No. 1" put into operation* (2024). Retrieved December 24, 2024, available at https://www.caea.gov.cn/n6760341/n6760359/c10559680/content.html.

22 International Atomic Energy Agency (IAEA), *Opportunities for cogeneration with nuclear energy* (n.d.). Available at https://www.iaea.org/publications/10877/opportunities-for-cogeneration-with-nuclear-energy.

23 International Atomic Energy Agency (IAEA), *Industrial applications and nuclear cogeneration* (n.d.). Available at https://www.iaea.org/topics/non-electric-applications/industrial-applications-and-nuclear-cogeneration .

24 J. Xing, *HPR1000: China's advanced pressurized water reactor NPP* (Science Press, Beijing, China, 2020), Vol. **1**.

25 J. Xing, C. Jing, Y. Dong, L. Fan, Advanced PWR technology – HPR1000 and Unit 5 of Fuqing Nuclear Power Plant, *Engineering* **31**, 31–36 (2023). https://doi.org/10.1016/j.eng.2023.11.009.

26 D.R. Song, *IAEA INPRO. Opportunities and Challenges in SMR and Its Practice in ACP100* (2019). Retrieved December 24, 2024, available at https://nucleus.iaea.org/sites/INPRO/df17/IV.1.-DanrongSong-ACP100.pdf.

27 Z.Y. Zhang, et al., The Shandong Shidao Bay 200 MWe high-temperature gas-cooled reactor pebble-bed module (HTR-PM) demonstration power plant: an engineering and technological innovation, *Engineering* **2**(1), 112–118 (2016). https://doi.org/10.1016/J.ENG.2016.01.020.

28 F. Li, HTR development in China, in International Workshop on Advances in Design of Generation-IV Small and Medium Sized of Modular Reactors (SMRs), 4th June 2024, Beijing, China (2024). Available at https://conferences.iaea.org/event/391/contributions/32275/.

29 Y.Y. Wu, *Development of urban heating in China under the dual carbon background* (2024). Retrieved December 24, 2024, available at www.igdp.cn/wp-content.

30 Ministry of Housing and Urban-Rural Development, National Development and Reform Commission, *Guiding opinions on promoting clean heating in northern heating areas* (2017). Available at https://www.chinagas.org.cn/4628/201709/15533.html.

31 China Atomic Energy Science Academy (CAEA), *China's first nuclear heating demonstration project settles in CGN* (2018). Available at https://www.caea.gov.cn/n6760338/n6760342/c6829487/content.html.

32 National Nuclear Safety Administration, *Domestic launch of nuclear heating: is it safe? Will it be popularized on a large scale in the future?* (2024). Available at https://nnsa.mee.gov.cn/ztzl/haqshmhsh/haqrdmyyt/202408/202408/t20240828_1084645.html.

33 Y.R. Li, J. Hu, Y. Ma, S.F. Guan, Development status and trend analysis of comprehensive utilization of nuclear energy, in *2023 Annual Conference of the Chinese Nuclear Society, 16–19 October 2023, Xian China*, Vol. 7: Nuclear Science and Technology Intelligence Research and Isotopes (2023).

34 B. Hu, X. Liu, Z. Sun, G. Ke, Core nuclear design of 400 MW pool-type low-temperature heating reactor, *Nucl. Tech.* **44** (2021).

35 National Development and Reform Commission, National Energy Administration, *Hydrogen industry development*

medium and long-term plan (2021–2035) (2023). Available at https://zfxxgk.nea.gov.cn/2022-03/23/c_1310525630.htm.
36 Standardization Administration of China, *Guidelines for the construction of hydrogen industry standards system (2023 edition)* (2023). Available at https://www.gov.cn/zhengce/zhengceku/202308/content_6897986.htm.
37 Sichuan Provincial People's Government Office, *Sichuan Province action plan for further promoting the development and application of the hydrogen industry chain (2024–2027)* (2024). Available at https://www.sc.gov.cn/10462/zfwjts/2024/11/6/9e09ce2bcb2c4474bdf93be512a251e8.shtml.
38 Beijing Municipal Bureau of Economy and Information Technology, *Several measures on supporting the development of the hydrogen industry (revised edition)* (2024). Available at https://jxj.beijing.gov.cn/zwgk/2024zcwj/202412/t20241217_3968075.html.
39 Guangzhou Municipal People's Government Office, *Several measures to accelerate the high-quality development of the hydrogen industry* (2024). Available at https://www.gz.gov.cn/zwgk/fggw/sfbgtwj/content/post_10008285.html.
40 Shanghai Institute of Applied Physics (SINAP), *20 kW Module/200 kW high-temperature solid oxide electrolysis hydrogen production device selected as the first major technical equipment in the national energy field* (2024). Available at https://www.sinap.cas.cn/xwzx/kydt/202412/t20241202_7449179.html.
41 International Atomic Energy Agency (IAEA), *Non-electric applications* (2024). Available at https://www.iaea.org/topics/non-electric-applications.
42 World Nuclear News, *Nine mile point starts supplying hydrogen* (2023). Available at https://www.world-nuclear-news.org/Articles/Nine-Mile-Point-starts-supplying-hydrogen.
43 Process Industry, The first nuclear power plant desalination system in China put into use, *Process Industry* **16**, 7-7 (2010).
44 Y.F. Ma, Design of desalination system for Sanmen Nuclear Power Plant, in 2014 Qingdao International Desalination Conference, 9th June 2014, Qingdao, Beijing (2014), pp. 92–99.
45 Tsinghua University, *Achieving large-scale "zero-energy" desalination and "zero-carbon" heating* (2024). Available at http://www.tsinghua.edu.cn/info/1181/84122.htm.
46 World Nuclear Association, *Desalination* (2024). Available at http://wna.origindigital.co/information-library/non-power-nuclear-applications/industry/nuclear-desalination#desalination.
47 A. Al-Othman, N.N. Darwish, M. Qasim, Nuclear desalination: a state-of-the-art review, *Desalination* **457**, 39–61 (2019). https://doi.org/10.1016/j.desal.2019.01.002.
48 R.S. El-Emam, H. Ozcan, R. Bhattacharyy, L. Awerbuch, Nuclear desalination: a sustainable route to water security, *Desalination* **542**, 116082 (2022). https://doi.org/10.1016/j.desal.2022.116082.
49 M. Zhao, *Thermal-economic evaluation of membrane-coupled desalination process system* (North China Electric Power University, Baoding, China, 2017). https://doi.org/10.7666/d.Y3264648.
50 L.F. Sun, Y.R. Xu, X. Zhao, Z.S. Liu, Research on absorption refrigeration scheme based on comprehensive utilization of nuclear energy, *Heating Ventilating Air Conditioning* **1**, 46–50 (2024).
51 China Atomic Energy Science Academy (CAEA), *The first in the world! Haiyang nuclear power "water and heat co-production and co-delivery" science and technology demonstration project put into operation* (2021). Available at https://www.caea.gov.cn/n6760338/n6760342/c6831074/content.html.
52 H.G. Xu, W. Luo, Research on the utilization of nuclear power plant's warm water discharge and central heating and cooling, *Fluid Mach.* **52**(8), 100–104 (2024). https://doi.org/10.3969/j.issn.1005-0329.2024.08.014.
53 Xinhua News, *Changjiang: beautiful sea nuclear power coexistence* (2024). Available at http://www.news.cn/science/20240627/6c8e2b5dfbda4009a4212042a5d9ea49/c.html.

Cite this article as: Xing J, Fan L, Wang P, Luo Y & Guo Z. Nuclear energy comprehensive utilization technology and practice in China under the "carbon peak and carbon neutrality" goals, Res. Des. Nucl. Eng. **2**, 2025007 (2026), https://doi.org/10.1051/rdne/2025007.